MonoTwin Slim

FLAMINIA.

design **L+R PALOMBA** **2020**

MTC42P MonoTwin Slim

Wall column-basin 42 cm (floor fixing kit art. 9005 included)

• WITHOUT OVERFLOW • WITHOUT TAP LEDGE

Complements: **Line taps basin:** ONE - NOKÈ - FOLD - X1
Line accessories: TWO - HOOP - NOKÈ - FOLD

Technical accessories:
Chrome siphon (SIFL/CR) - **Telescopic chrome siphon** (SIFL066)
Stop & Go drain (PLSG)
Ceramic Stop&Go drain (PLCE)
Chrome waste with automatic integrated overflow (PLTPCR)
Waste with automatic integrated overflow and ceramic cover (PLTPCE)
Two piece set chrome tap filters (RF026)

Package dim. cm	Weight 47,5 kg	Pz. Pallet n° 4

CE UNI EN 14688 - CL00 Dop-No14688

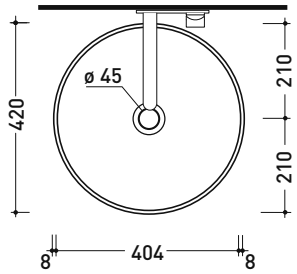

vista zenitale / zenital view

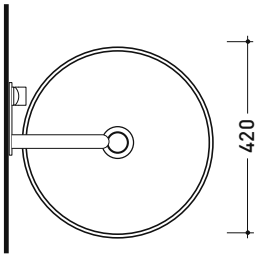

vista zenitale / zenital view

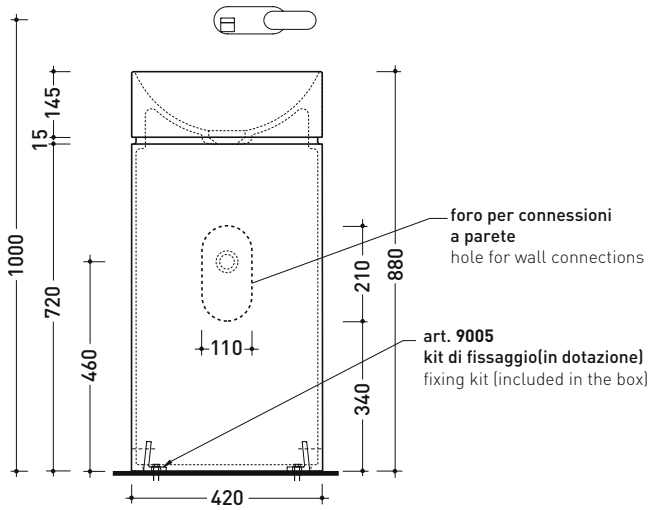

vista frontale / frontal view

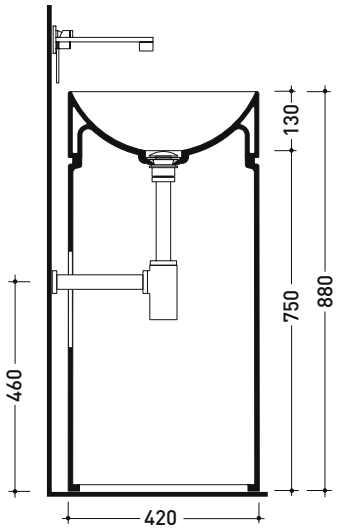

sezione longitudinale / section

sizes in mm

Please consider a 2% tolerance on indicated measurements

CERAMIC: glossy finish

white black

matt finish

milky white carbone argilla cenere nuvola fango rosso rubens petrolio

http://www.ceramicaflaminia.it/en/products/322-twin

©ceramicaflaminiaspa - All rights reserved. Unauthorized copying, publication, reproduction as well as partial reproduction are prohibited